A Time For Change

Leading technology is the key

to efficient

precise

Harvesting

Innovation through awareness

"Many people thought that the Ferguson system was the ultimate innovation in design although I have constantly stated that it was only the beginning of what must be done for the farmers of the world".
Harry Ferguson

In order to continue farming the land in a respectful and productive manner, certain challenges must be met. Our pursuit of the ideal harvesting machine has meant years of intense design and engineering.

Now Massey Ferguson has proudly met that challenge.

The MF 9280 DELTA combine has been developed to allow the modern farmer to grow with changing demands in their sector without compromising their business strategy.

Our ideology is this: To produce machinery that meets the demands of large scale farmers and contractors; reliably, efficiently and with an excellent return on investment.

For that we have created the DELTA; a synergy between conventional threshing and twin rotor separation. The first on the market and in its class to boast a seven cylinder, 496* horsepower, Selective Catalytic Reduction engine.

Next harvest will see the biggest change in our combine philosophy and will come with proven technology, giving proven results.

* Including 30hp boost

The world's first combine harvester with Selective Catalytic Reduction

The new MF 9280 DELTA combine is the first on the market to have an engine with Selective Catalytic Reduction technology. Massey Ferguson is setting revolutionary new standards in fuel efficiency.

The purest technology for today's harvest
The new MF DELTA combine holds the key to the future. The enhanced, 496hp*, seven cylinder, 9.8 litre AGCO SISU POWER engine works with the SCR (Selective Catalytic Reduction) system for engine management and exhaust-gas treatment. SCR technology injects AdBlue® into the exhaust system; optimising combustion, neutralizing nitrogen-oxides and reducing particulate matter. This system not only helps to protect the environment, it also allows for optimal engine performance and improved fuel efficiency.

You will notice significant fuel savings straight away as the engine provides consistent power without loss and at the same time reducing fuel consumption. SCR engines have already been proven to lower fuel costs and engine emissions.

The MF DELTA combine meets future emissions regulations, even before compliance becomes mandatory.

*With 30hp boost

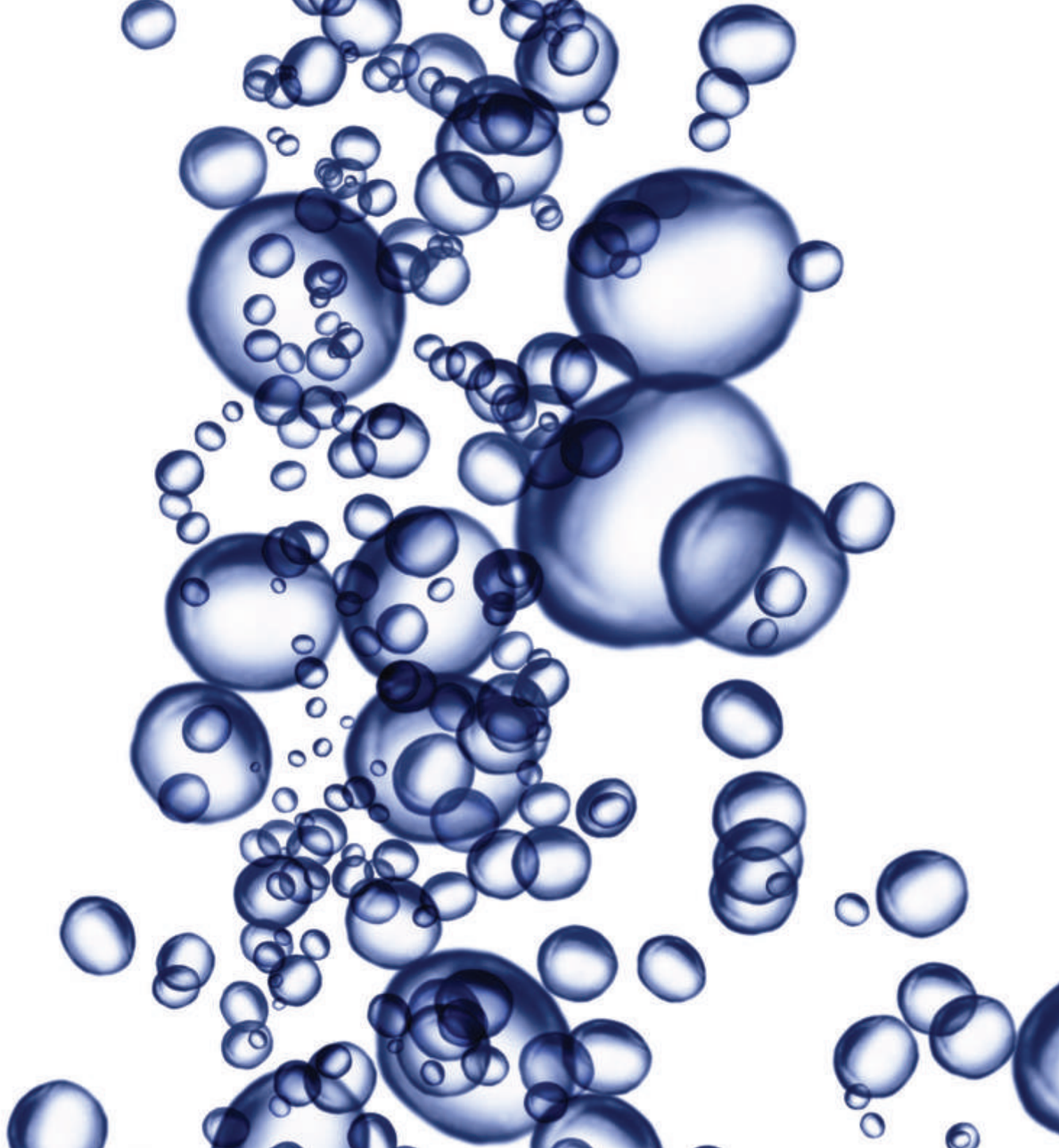

HyPerforma Threshing and Separation Technology

A unique combination of proven technology and innovation bringing Massey Ferguson to the forefront of harvesting.

The Hi-Inertia threshing cylinder (1) boasts exceptional threshing and separation capacity. This highly effective system provides outstanding grain samples with its 1.68m wide and 0.6m diameter cylinder. Heavy-duty backing bars are mounted behind rasp bars to provide extra-strength and support. Not only that, the weight acting on the end of the drum creates a 'flywheel' effect and the only true Hi-Inertia threshing system on the market. This 'flywheel' characteristic keeps a constant drum speed in undulating crop conditions. This maintains crop feed, boosts performance and guarantees fuel efficiency without loss of output.

Crop feeding into the threshing system will pass across the unique ledger plate (2) to the main concave. This tapers the crop flow, reducing power and fuel consumption. At the same time, the crop is pre-threshed to maximise grain separation and achieve exceptional grain samples. The high-strength concave uses wider spacing bars for durability and longevity.

The separation system begins with material being fed smoothly and consistently into the Rotor Feeder (3) where the crop is then split and forced into the Hi-Separation rotors with minimal effort and energy.

To maximise material throughput and efficiency, the unique loading bay (4) is a wide inlet area into the Rotor Feeder. This allows for a smooth transition of crop to be passed through at high capacity.

Once this process is complete, the two Hi-Separation rotors (5), which are 0.475m in diameter, push the crop evenly along the entire length of the rotor.

The spiral formation separation tines (6) further enhance the movement of the crop and ensure clean, highly-productive grain separation. This HyPerforma system has been specifically developed to give an exceptionally clean grain sample and the highest quality straw for baling.

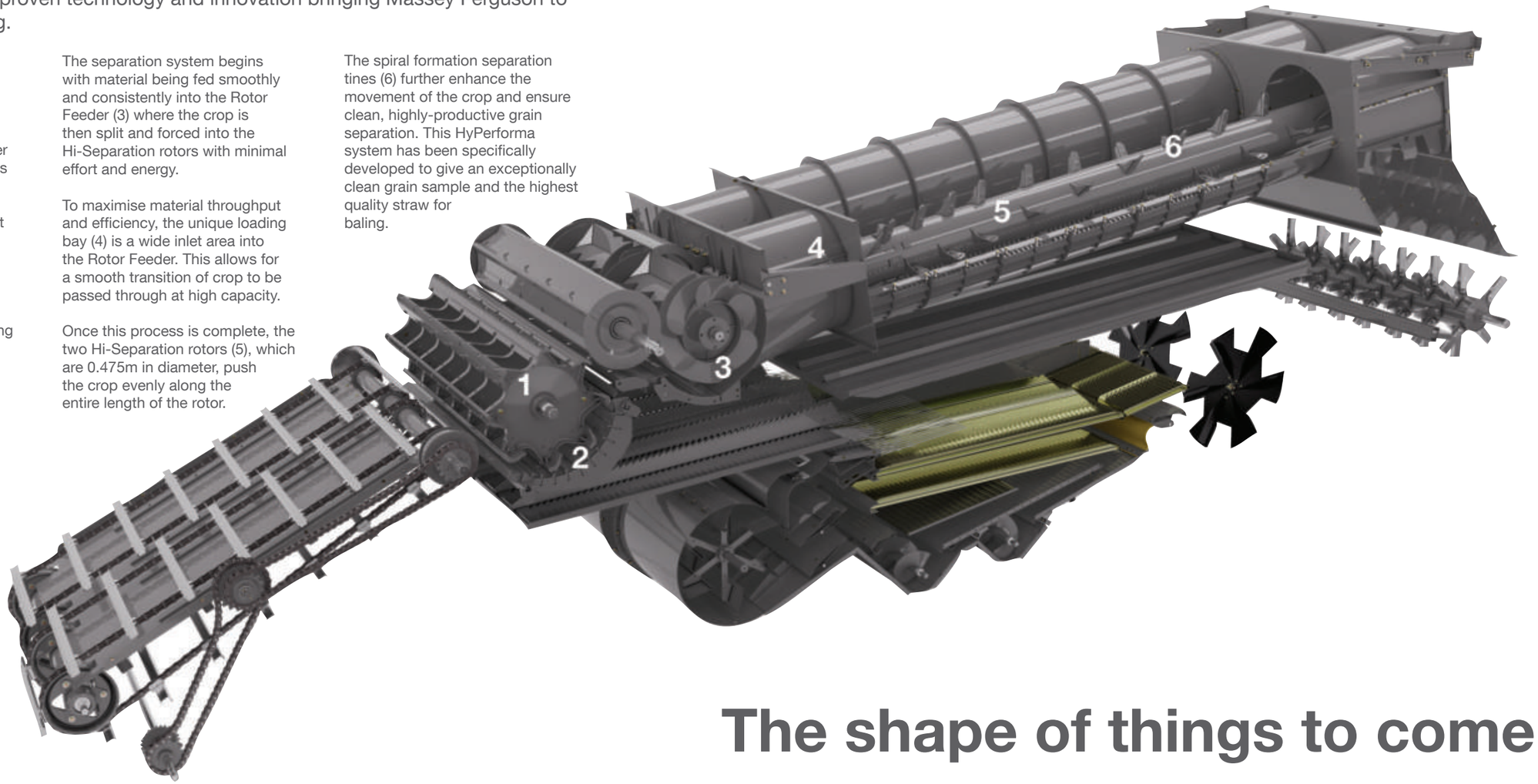

The shape of things to come

Powerful features, advanced solutions

Advanced features of the MF Delta combine are proven to deliver outstanding results. Providing you with the solutions you need to run a profitable business.

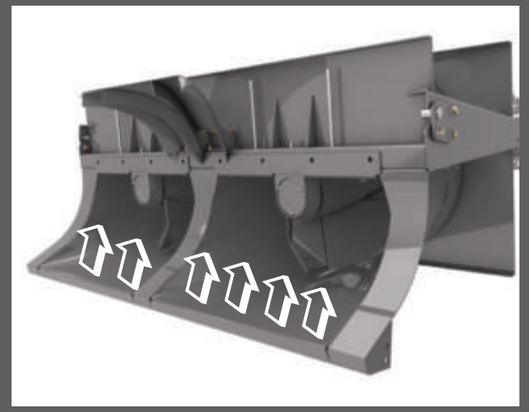

The Loading Bay
has a wide inlet for maximum entry and smooth flow ensuring continuity from the Rotor Feeder. With an asymmetrical wall design and a tapered rotor shaft, the entry is larger, permitting the crop flow to be gently processed without restriction into the Hi-Separation Rotors.

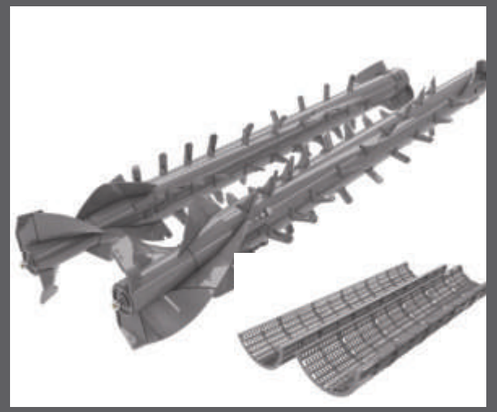

Hi-Separation Rotors and Concaves
Class leading 4.2m long and 0.475m in diameter, the rotors on the MF DELTA are designed to work efficiently and economically whilst ensuring gentle separation; kind on the grain and on the straw. Electronically adjustable speed from 360 to 1000 rpm.

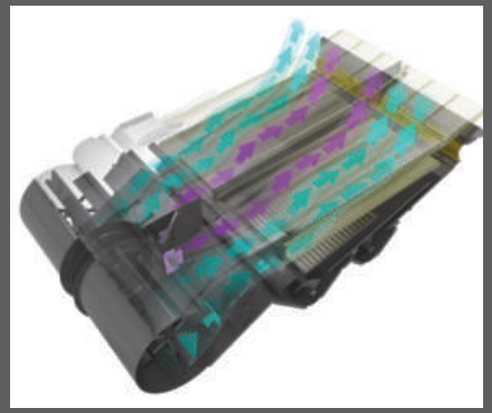

The Venturi Cleaning System
This system creates an optimised airflow across 100% of the sieves surface. The aerodynamically designed air inlets situated in the middle of the fan housing create a “venturi” effect raising the amount of air for efficient grain cleaning required for the higher grain output from the HyPerforma system.

Economic. Efficient. Ecological engines
Powerful seven cylinder, 9.8 litre SCR engines provide maximum power and high-torque specifically for harvesting delivery plus excellent fuel economy and low emissions when you need it.

Specifications

Every effort has been made to ensure that the information contained in this publication is as accurate and current as possible. However, inaccuracies, errors or omissions may occur and details of the specifications may be changed at any time without notice. Therefore, all specifications should be confirmed with your Massey Ferguson Dealer or Distributor prior to any purchase.

MF 9280 DELTA

Powerflow Table		MF 9280	MF 9280AL
Width	m	6.8 to 9.2	
Reel Drive		Hydraulic	
Reversing		Hydraulic	
AutoLevel		-	●
Constant Flow		●	●
HyPerforma Threshing Technology			
Threshing Drum diameter	mm	600	
Concave Area	m^2	1.18	
Rotor Feeder diameter	mm	500	
Beater Concave Area	m^2	0.33	
Separation Area Rotor Feeder	m^2	0.39	
Rotary Separation		2 rotors	
Rotor diameter	mm	475	
Rotor Length	mm	4200	
Rotor Separation Area	m^2	3.54	
Total Separation Area	m^2	5.44	
Rotor Speed	rpm	360 to 1000	
Venturi Cleaning System			
Total Sieve Area	m^2	5.3	
Two Step System, pressurised		●	●
Removable Preparation Floor		●	●
Fan Speed Adjustment		Electric	
Electronically Adjustable Sieves		2	
Separate Rethresher		●	●
Grain Tank			
Capacity		10500	9500
Unloading Rate	l/sec	110	
Max Unloading Height	mm	4500	
Crop Residue Handling			
High speed Min Till Chopper		●	●
108 Serrated Knives		●	●
Maxi Spreader		❍	❍
Straw Chopper Deflectors		❍	❍
Chaff Spreader		●	●

Engine		MF 9280	MF 9280AL
Manufacturer		AGCO SISU POWER e³ SCR	
Maximum Power*	✪ hp/kW	496/367	
Fuel Tank Capacity	Litres	750	
Adblue Tank Capacity	Litres	103	
Transmission			
Hydrostatic		●	●
No. of Gears		4	
Speed Range		0 - 25 km/h	
Cab			
Type		Integral, Sound proofed	
Ventilation		Fan type	
Automatic air conditioning		●	●
Heating		●	●
Datavision II		●	●
Air Seat		●	●
Weights and Dimensions			
Height (Transport Position)	mm	4000	4000
Transport Width	mm	3882	3882
Length (w/o table)	mm	8266	8266
Weight (w/o table)	Kg	16,500	16,500

✪ ISO TR14396
● Standard
❍ Optional
- Not applicable
* Including 30hp boost

MF 9280 DELTA highlights

The Massey Ferguson 9280 DELTA combine is the future of harvesting; sharing many of the outstanding features found on other Massey Ferguson combine harvesters, the MF 9280 DELTA combine is truly ahead of its time.

01 The MF 9280 DELTA combine harvester from Massey Ferguson is the perfect combination of efficiency and economy.

02 PowerFlow: This world-renowned 'cutting platform' can deal with the harshest conditions and the highest of capacities. It has 'quick crop' changeability for complete versatility. PowerFlow is standard on both models.

03 The Hi-Inertia threshing cylinder at the heart of the combine boasts exceptional threshing and separation results. This highly effective system provides outstanding grain samples and well-designed components guarantee fuel efficiency.

04 Performance enhancing Constant Flow is a superb feature which allows the combine to work at maximum capacity and optimum output by sensing the load on the cylinder and varying the machines forward speed to match the crop.

05 High performance concave with wider opening for maximum grain removal and the cleanest of grain samples.

06 Separation is achieved by two NEW class-leading high capacity rotors. Spiral patterned fingers ensure a smooth transport along the rotors for higher output.

07 The NEW Venturi Cleaning System increases airflow through the sieves, maintaining high cleaning performance to achieve exceptional grain samples and increase productivity.

08 The min-till chopper has 108 serrated knives arranged in 8 rows which work at high speed to produce a very fine chop. An optional maxi-spread chopper hood can be fitted for spreading high volumes of straw over wider distances.

09 Proven to substantially reduce emissions and fuel costs; the MF DELTA combine has a seven cylinder, 496* hp, AGCO SISU POWER engine with Selective Catalytic Reduction technology.

*With 30hp boost

For more information and the location of your nearest Massey Ferguson dealership, please visit our website, www.masseyferguson.com. Look out for the MF DELTA full range brochure in Summer 2010.

MASSEY FERGUSON